Product Specification

Charging Module

X-EV series

(XEV22KHGEU-FAC)

Version: R1.2

© 2025 Suzhou Niuera Energy Co., Ltd All rights reserved.

CONTENT

1. Product naming meaning 3
2. Product Introduction 3
3. Product Electrical Parameters 3
4. Power Module Characteristic Curve 7
4.1 Relationship between output power and input voltage when working in rectification mode 7
4.2 Working in grid-connected inverter mode 7
4.3 Off-grid inverter mode input external characteristic curve 8
4.4 Output power limit control 9
4.5 Grid-connected inverter mode output external characteristic curve 9
4.6 Temperature power limited 10
4.7 Parallel current sharing 10
4.8 DC side current limit adjustment 10
4.9 Output voltage regulation 10
4.10 Active/reactive power regulation 11
4.11 Rectifier input over/under voltage protection 11
4.12 Inverter input over/under voltage protection 11
4.13 Rectifier output over/under voltage protection 11
4.14 Inverter output over/under voltage protection 12
4.15 Overtemperature protection 12
4.16 Internal busbar over/undervoltage protection 12
4.17 Short-circuit protection 12
4.18 Backend communication interruption 13
4.19 AC over/under frequency 13
4.20 Fan failure protection 13
4.21 Discharge fault protection 13
5. Physical Structure 13
6. Panel indicator light 14
7. Fault code table 15
8. Module Buttons 15
9. Module interface definition 17
10. Module Accessory Components Introduction 18
10.1 Three-Phase AC Side Power Cable 18
10.2 DC-side power cables 18
10.3 Communication cable 18
11. Module Terminal Kit Introduction 18
11.1 Three-phase AC side connector 19
11.2 DC side connector 19
11.3 Adapter Board 20
11.4 Mounting Screws 20
11.5 Wiring harness power terminal 21
12. Fault Symptoms and Solutions 22
12.1 Fault Troubleshooting Recommendations 22
12.2 Replacing a Faulty Module 23

© 2025 Suzhou Niuera Energy Co., Ltd All rights reserved.

Charging module product specification

1. Product Model Meaning

The product model consists of capital letters and numbers, and the specific markings are as follows:

X – EV – 22K – HG – EU– FAC

1 2 3 4 5 6

No.	Letter	Explanation
1	X	Fixed letter X indicates enterprise code
2	EV	Product category code, bidirectional AC/DC charging module (V2G)
3	22K	22KW
4	HG	Semi gel filling
5	EU	Meets EU certification standards
6	FAC	Air cooling

2. Product Introduction

XEV22KFG is a high-frequency isolated bidirectional AC/DC conversion module with the advantages of wide constant power voltage range, high efficiency, high power density, high reliability, and low electromagnetic radiation. It can be widely used in scenarios such as V2G, energy storage, second life battery utilization, and DC power supply aging test equipment.

3. Product Electrical Parameters

Model	Input Voltage Range	Output Voltage	Full Power Output Current	Maximum output power
XEV22KHGEU-FAC	260-530Vac	200-1000V DC	0-75A	22KW

© 2025 Suzhou Niuera Energy Co., Ltd All rights reserved.

Charging module product specification

Parameter		Minimum Value	Typical Value	Maximum Value	Remark
AC port Rectification/ Grid-tied	Input voltage range	260Vac		530Vac	Input type: three-phase + PE
	Rated voltage	380Vac/400Vac/480Vac			
	Rated current		33A		@380Vac
	Grid frequency	45~65Hz，Range can be set			
	Rated frequency	50/60Hz			
	Power Factor	Rectification mode ≥0.99			@50%~100% Load current, rated input voltage and frequency
		Grid-connected mode: 0.8 leading ~ 0.8 lagging			Configurable
	iTHD	≤5%			@50%~100% Load current
AC port Off-grid mode	Voltage range	323Vac~437Vac			Input type: three-phase + N + PE
	Rated voltage	380Vac/400Vac			
	Rated current	33A			
	Frequency setting range	50Hz~60Hz			
	Rated frequency	50Hz/60Hz			
	vTHD	< 3%			@No load and rated resistive load (balanced load)
	Output voltage phase angle	< 3°			@No load and rated resistive load (balanced load)
	Voltage deviation	< 5%			@No load and rated resistive load (balanced load)

© 2025 Suzhou Niuera Energy Co., Ltd All rights reserved.

Charging module product specification

	Output voltage imbalance	Steady state <2%, transient <4%	@No load and rated resistive load (balanced load)
	Power Factor	0.8 leading ~ 0.8 lagging, adjustable	
DC port	Voltage range	Rectification/grid-tied: 150V-1000Vdc Off-grid: 200-1000Vdc	
	Current range	Rectification: 0~73.5A Inversion: 2-78A (current limit can be set)	
	Rated current	22A@1000Vdc	
	Current stability accuracy	≤ ±1%	Output current 20%~100% rated current value
	Voltage stabilization accuracy	< ±0.5%	
	Load regulation rate	≤ ±0.5%	
	Current balancing accuracy	≤ ±5%	
	Charge and discharge conversion time	T ≤100mS	
	Efficiency	≥96% @AC side 380Vac, DC side 400Vdc/800Vdc/1000Vdc, 50% ~ 100% load current	
	Fan noise	< 65dB（1 m away from the device）	
	CAN communication	Rectification/grid-tied ≤ 60 units, off-grid ≤ 8 units	
	Output voltage ripple factor	≤ 1%	
Protect	Short circuit protection	After a short circuit, the module current shrinks and enters the current limiting state	Work can be resumed after the fault is removed
	Output over-voltage protection point	1030Vdc	Manual recovery possible

© 2025 Suzhou Niuera Energy Co., Ltd All rights reserved.

	Over temperature protection	If the detected temperature is higher than the preset value of 75℃, it will automatically protect			No output after protection; after recovery, a command needs to be issued to start the machine
	Input over-voltage protection	1025V has hysteresis			No output after protection; after recovery, a command needs to be issued to start the machine
	Input under-voltage protection	45Vdc has hysteresis			No output after protection; after recovery, a command needs to be issued to start the machine
	Fan failure alarm	The module fan fails: If it stops rotating			The module automatically shuts down, the red light turns on, and a fault is reported
Environment	Ambient temperature	-40℃	-	75℃	Derate use above 55℃
	Storage temperature	-40℃	-	75℃	Humidity:5%-95%, non-condensing
	Atmospheric pressure at high altitude	79kPa ~ 106kPa; Altitude <2000m; Above 2000m, derating should be considered			
	Protection level	IP20			
	Ground resistance	≤0.1Ω			
	Insulation resistance	Insulation resistance between DC part and shell and between DC input part and DC output part ≥10MΩ			
	Dielectric strength	Insulation resistance between DC part, AC part and shell, and between AC part and DC part ≥ 10MΩ The AC side terminal applies 4242V DC voltage to the shell for 1 minute, and there is no breakdown or arcing, and the steady-state leakage current is less than 1mA; The AC side terminal applies a 4242V DC voltage to the DC side terminal for 1 minute, and there is no breakdown or arcing, and the steady-state leakage current is less than 1mA; The DC side terminal applies 4242V DC voltage to the housing for 1 minute, and there is no breakdown or arcing, and the steady-state leakage current is less than 1mA;			
	ROHS	R6			
Other	MTBF	≥ 500,000 hours			
	Size（W*D*H）	300x395x85mm (W x D x H)			
	Weight	≤15kg			

© 2025 Suzhou Niuera Energy Co., Ltd All rights reserved.

4. Power Module Characteristic Curve

4.1 Relationship between output power and input voltage when working in rectification mode

Figure 4-1

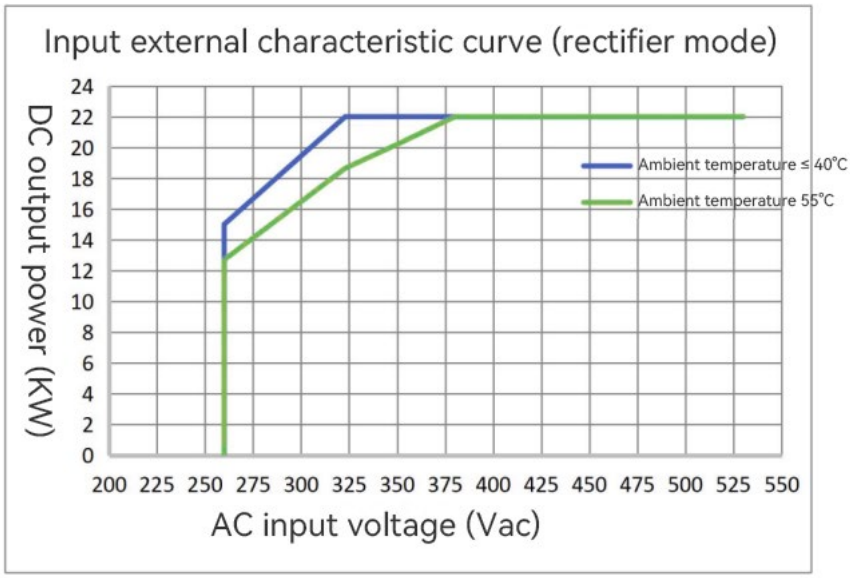

When the ambient temperature is less than 40°C and the input voltage is between 323Vac and 530Vac (with a hysteresis less than 5V), the module can output a maximum power of 22kW. When the input voltage is between 260Vac and 323Vac, the module outputs linear power limitation. When the ambient temperature is less than 55°C and the input voltage is between 380Vac and 530Vac (with a hysteresis less than 5V), the module can output a maximum power of 22kW. When the input voltage is between 260Vac and 380Vac, the module outputs segmented linear power limitation.

4.2 Working in grid-connected inverter mode

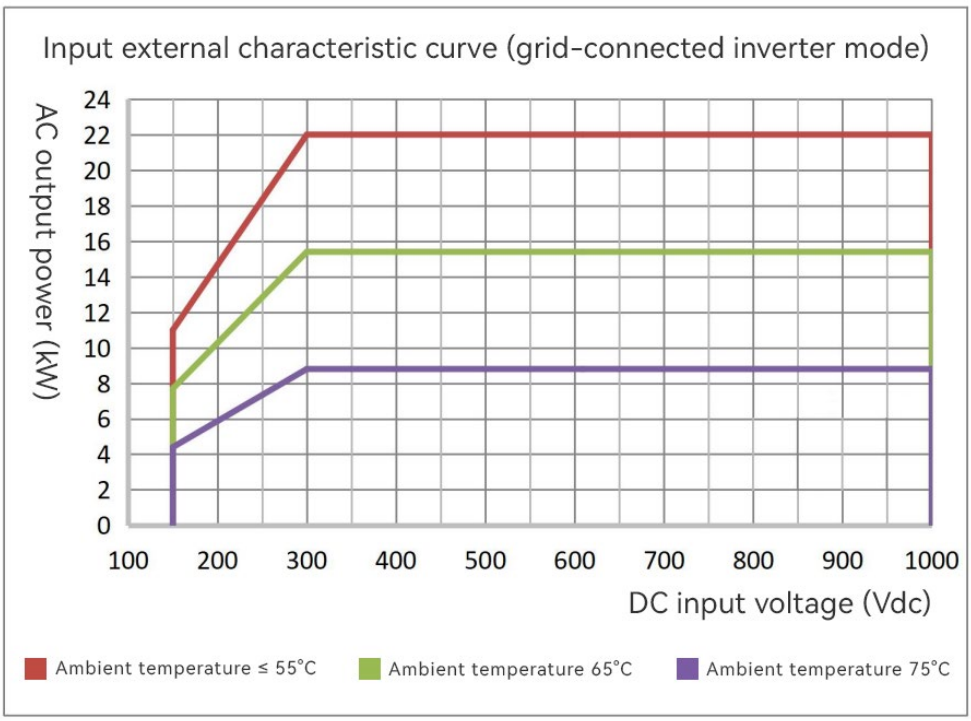

© 2025 Suzhou Niuera Energy Co., Ltd All rights reserved.

When operating in grid inverter mode, when the ambient temperature is less than 55°C and the input voltage is between 300Vdc and 1000Vdc, the module can output a maximum power of 22kW. When the input voltage is between 150Vdc and 300Vdc, the module output power is linearly limited from 22kW to 11kW. When the input voltage is lower than 150Vdc, the module will go into undervoltage protection.

4.3 Off-grid inverter mode input external characteristic curve

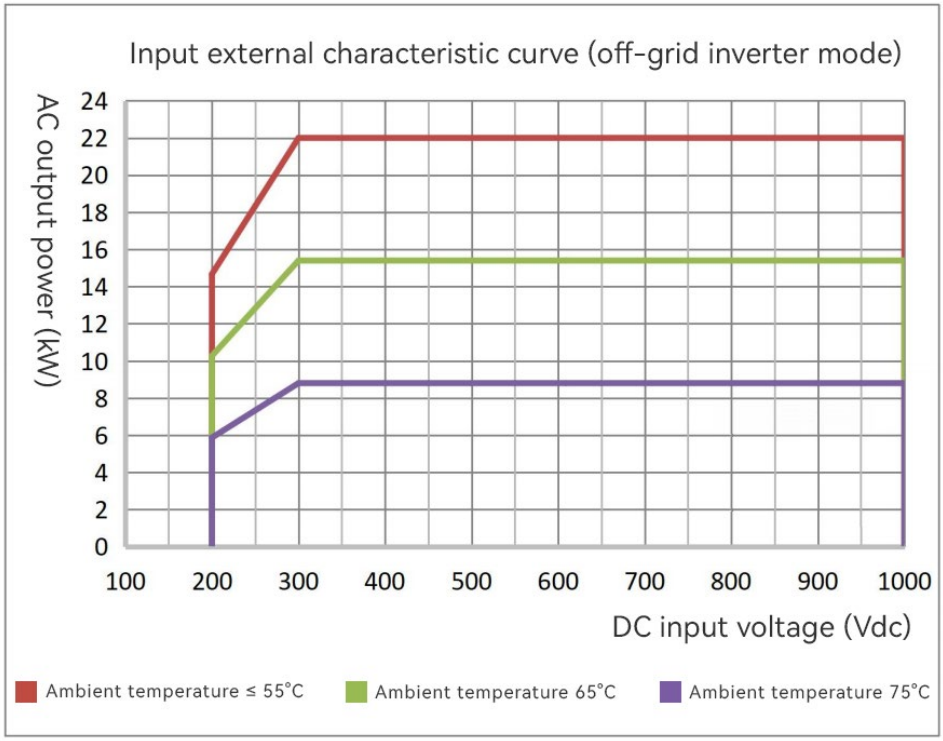

When operating in off-grid inverter mode, when the ambient temperature is below 55°C and the input voltage is between 300Vdc and 1000Vdc, the module can output a maximum power of 22kW. When the input voltage is between 200Vdc and 300Vdc, the module linearly limits power. When the input voltage is below 200Vdc, the module will enter undervoltage protection.

© 2025 Suzhou Niuera Energy Co., Ltd All rights reserved.

4.4 Output power limit control

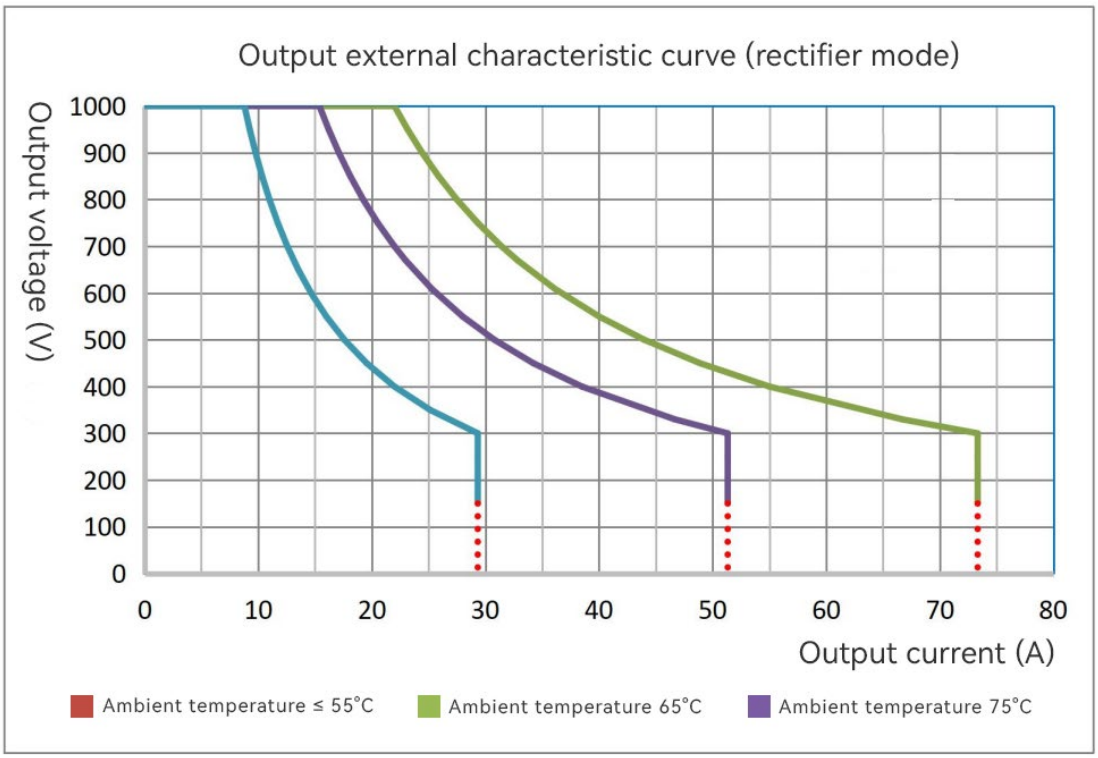

When working in rectification mode, when the ambient temperature is less than 55℃ and the output voltage is between 300Vdc and 1000Vdc, the module can output a maximum power of 22kW; when the output voltage is between 150Vdc and 300Vdc, the module's maximum output current is 73.5A.

4.5 Grid-connected inverter mode output external characteristic curve

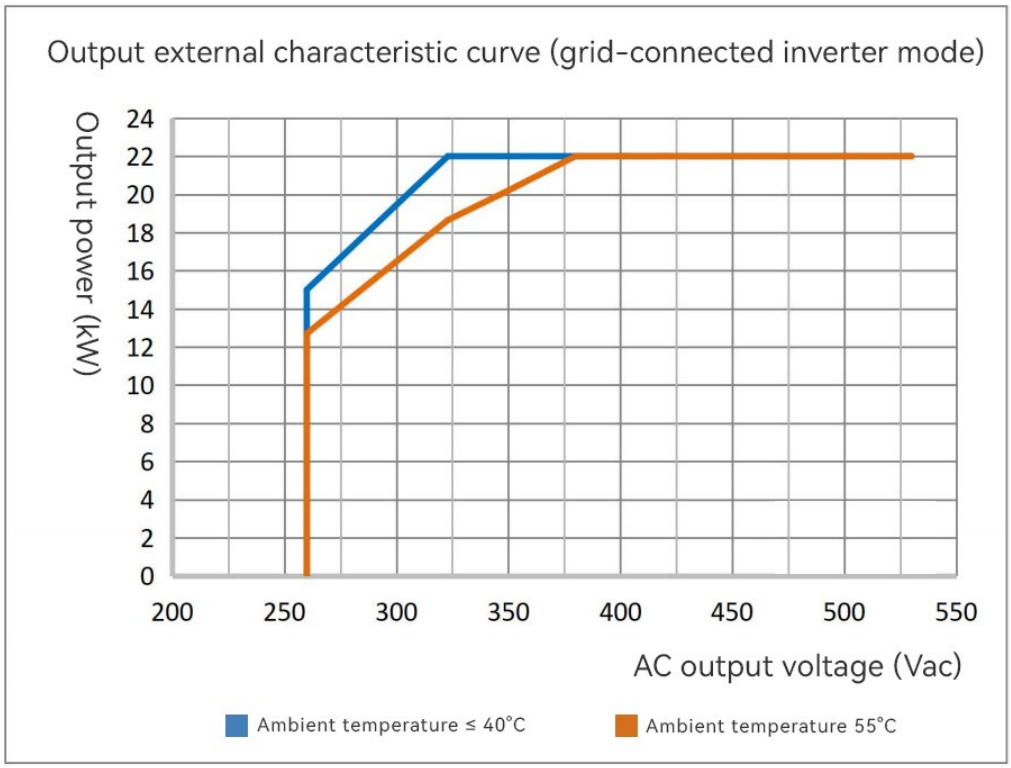

© 2025 Suzhou Niuera Energy Co., Ltd All rights reserved.

In off-grid inverter mode, the AC output voltage is adjustable from 340Vac to 420Vac, and the module can output a maximum power of 22kW. It supports single-phase load (three-phase unbalanced load), with each phase capable of carrying a maximum load of 7.33kW. AC voltage and frequency can only be adjusted in standby mode.

4.6 Temperature power limit

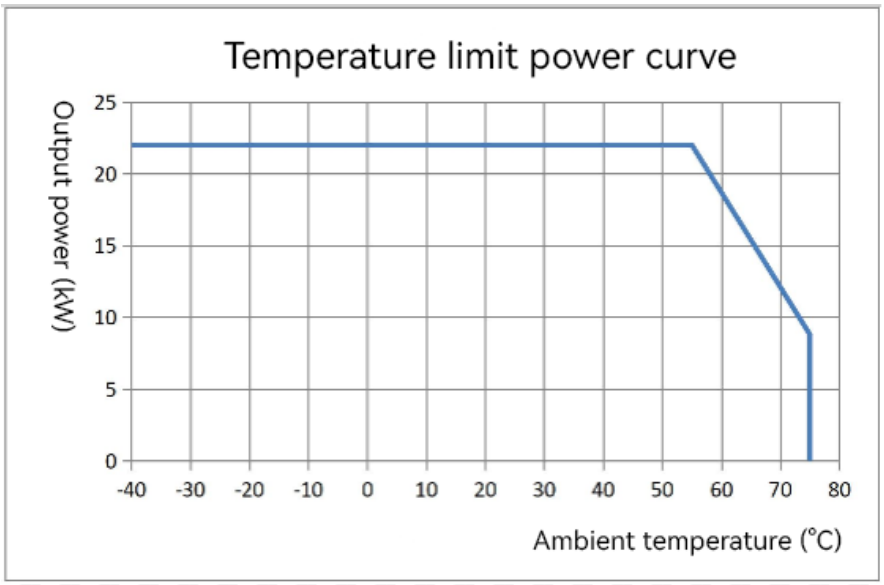

Below 55°C ambient temperature, the module operates at full power.

Above 55°C, the module operates at a reduced power rating and linearly limits power.

At 65°C ambient temperature, the module output power is allowed to be ≤15kW.

At an ambient temperature of 75°C, the module output power drops to 8kW.

Above 75°C, the module output power drops to 0.

4.7 Parallel current sharing

In rectifier and grid-connected modes, a maximum of 60 modules can be connected in parallel. Current is automatically shared between modules, with an imbalance within ±5%. In off-grid mode, a maximum of 12 modules can be connected in parallel. To connect the modules, connect the power frequency synchronization signal and AC_Can signals in parallel. Current is automatically shared between modules, with an imbalance within ±5%. See Figure 4-5 and Table 4-3 for wiring diagrams.

4.8 DC side current limit adjustment

The module's DC-side current limit can be adjusted via an external monitoring module. In rectifier mode, the module's output current limit is adjustable from 0A to 73.5A. In inverter mode, the module's input current limit is adjustable from 2A to 78A. In inverter mode, the DC-side power limit should be greater than the AC-side output power. It is recommended to increase the DC-side power limit.

4.9 Output voltage regulation

In rectifier mode, the module's DC output voltage can be continuously adjusted from 150Vdc to 1000Vdc in 0.1Vdc steps via an external monitoring module.

© 2025 Suzhou Niuera Energy Co., Ltd All rights reserved.

In off-grid mode, the module's AC output voltage can be continuously adjusted from 340Vac to 420Vac in 0.1Vac steps via an external monitoring module. AC voltage and frequency can only be adjusted in standby mode.

In grid-connected mode, the module's AC output voltage follows the grid voltage and requires no adjustment.

4.10 Active/reactive power regulation

In grid-connected mode, the module's active and reactive power output range is dynamically adjustable within the four-quadrant range within the solid rectangle shown in Figure 1-7. The maximum reactive power output is 0.484% of the rated active power, and the maximum apparent power output is 24.44 kVA. It supports multiple reactive power control modes, including voltage/reactive power control, constant power factor control, and constant reactive power control, with the ability to switch between these control modes online.

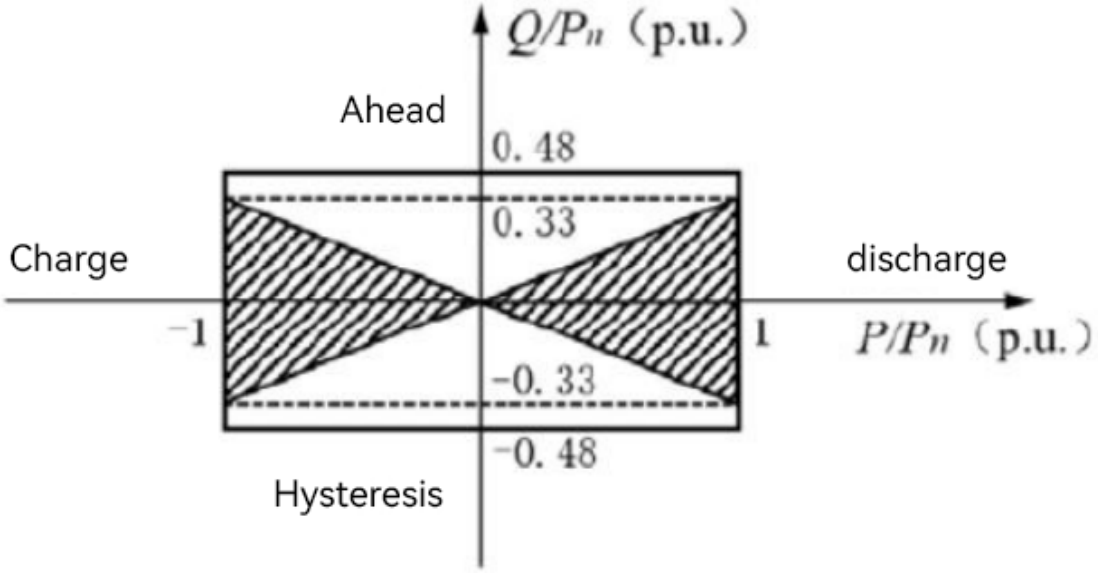

Note: P—the current active power of the module; Q—the current reactive power of the module; Pn—the rated active power of the module.

4.11 Rectifier input over/under voltage protection

When the module is in rectifier mode and the three-phase AC input voltage is less than 260Vac, the input undervoltage protection is triggered, causing the module to automatically shut down. The yellow indicator on the panel illuminates, and the LED display shows fault code E03. When the three-phase AC input voltage exceeds 530Vac, the input overvoltage protection is triggered, causing the module to automatically shut down. The yellow indicator on the panel illuminates, and the LED display shows fault code E04.

When an overvoltage or undervoltage alarm occurs, the module reports the alarm information to the monitoring module. When the input voltage returns to the normal range, the alarm disappears, and the module returns to standby mode.

4.12 Inverter input over/under voltage protection

When the module is in grid-connected (or off-grid) inverter mode and the DC input voltage is less than 145Vdc (195Vdc), the input undervoltage protection is triggered, causing the module to automatically shut down. The yellow indicator on the panel illuminates, and the LED display displays fault code E01. When the DC input voltage exceeds 1030Vdc, the input overvoltage protection is triggered, causing the module to automatically shut down. The red indicator on the panel illuminates, and the LED display displays fault code

© 2025 Suzhou Niuera Energy Co., Ltd All rights reserved.

E06. When an overvoltage or undervoltage alarm occurs, the module reports the alarm to the monitoring module. When the input voltage returns to the normal range, the alarm disappears, and the module resumes operation.

4.13 Rectifier output over/under voltage protection

When the module is in rectifier mode and the DC output voltage is less than 145Vdc, the output undervoltage protection is triggered, causing the module to automatically shut down. The yellow indicator on the panel illuminates, and the LED display displays fault code E01. When the DC output voltage exceeds 1030Vdc, the output overvoltage protection is triggered, causing the module to automatically shut down. The red indicator on the panel illuminates, and the LED display displays fault code E06. In rectifier mode, manual intervention is required to restart the module after the output overvoltage protection is triggered. The undervoltage protection can be reset five times. If the output undervoltage condition persists after five times, the module will shut down and lock, requiring manual intervention to restart. (Manual intervention can be performed by resetting the module through the monitoring module or by disconnecting the module from the system.)

4.14 Inverter output over/under voltage protection

When the module is in grid-connected inverter mode and the three-phase AC output voltage is less than 260Vac, the output undervoltage protection is triggered, causing the module to automatically shut down. The yellow indicator on the panel illuminates, and the LED display shows fault code E03. When the three-phase AC output exceeds 530Vac, the output overvoltage protection is triggered, causing the module to automatically shut down. The yellow indicator on the panel illuminates, and the LED display shows fault code E04.

When an overvoltage or undervoltage alarm occurs, the module reports the alarm information to the monitoring module. The alarm disappears when the output voltage returns to the normal range. When the undervoltage alarm disappears, the module resumes operation. When the overvoltage alarm disappears, the module returns to standby mode.

4.15 Over temperature protection

The over-temperature protection threshold is 75°C. When the ambient temperature exceeds 75°C, the module automatically shuts down, the yellow indicator light on the panel illuminates, and the LED digital tube displays fault code E02. When the ambient temperature returns to the normal range, the module remains shut down and a power-on command is required to control the output.

4.16 Internal busbar over/undervoltage protection

When the bus voltage inside the module exceeds the overvoltage/undervoltage protection point, the module shuts down for protection, the yellow indicator on the panel lights up, and the LED digital tube displays fault code E14. After the fault is eliminated, the module returns to standby mode.

4.17 Short-circuit protection

When the module is short-circuited, it shuts down, the red indicator light on the panel lights up, and the LED digital tube displays the fault code E05. After the DC side short-circuit protection, manual intervention is required to restart the module. (Manual intervention method: reset the module through the monitoring module, or disconnect the module from the system to reset it)

© 2025 Suzhou Niuera Energy Co., Ltd All rights reserved.

4.18 Background communication interruption

If the module experiences a communication interruption for more than 10 seconds, the module shuts down for protection and the yellow indicator light on the panel turns on. The module returns to standby mode after the fault is eliminated.

4.19 AC over/under frequency

In rectifier and grid-connected modes, if the AC voltage frequency is less than 45 Hz or greater than 65 Hz, the module enters AC over-/under-frequency protection. The yellow indicator on the panel lights up, and the LED digital tube displays fault code E11. After the fault is eliminated, the module returns to standby mode.

4.20 Fan failure protection

When a fan fails, the module will generate a fan fault alarm, the module will shut down for protection, the red indicator light on the panel will light up, and the LED digital tube will display the fault code E08. After the fault is eliminated, the module will return to standby mode.

4.21 Discharge fault protection

When a discharge failure occurs, the module will generate a discharge fault alarm, the module will shut down for protection, the red indicator light on the panel will light up, and the LED digital tube will display the fault code E15.

5. Physical Structure

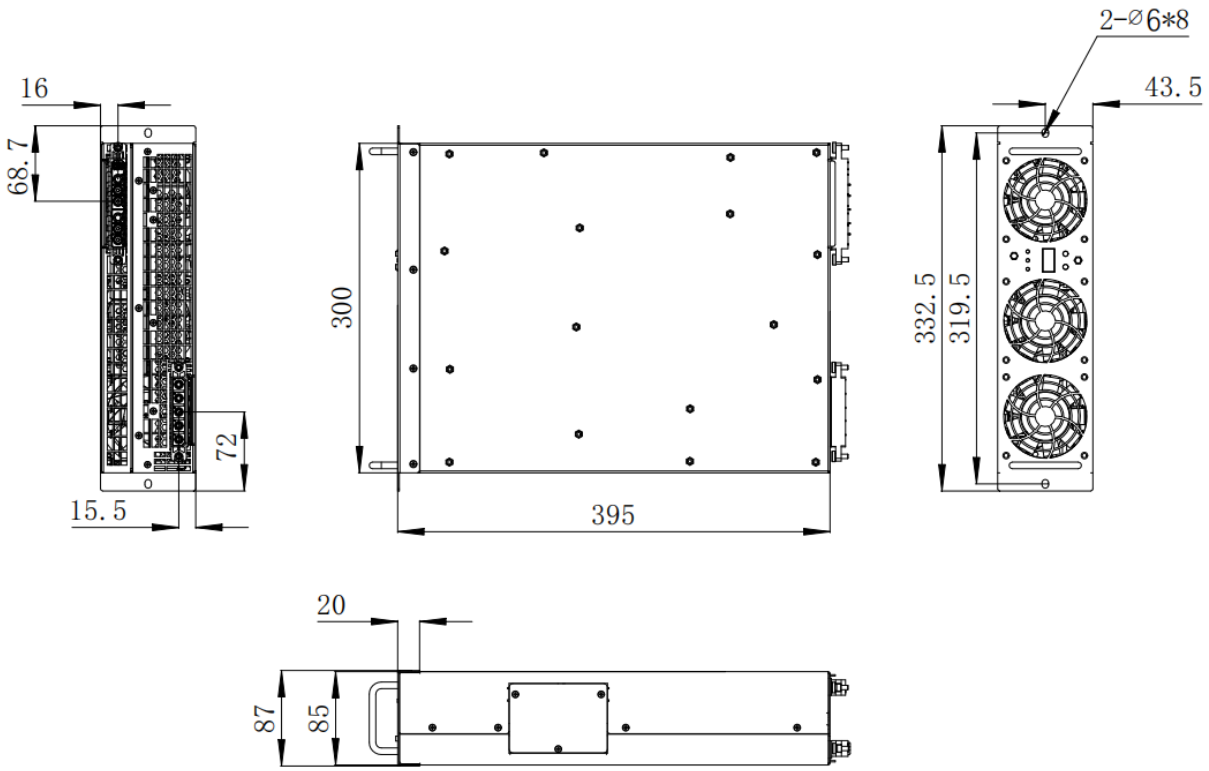

© 2025 Suzhou Niuera Energy Co., Ltd All rights reserved.

6. Panel Indicator Light

Figure 1 Front panel

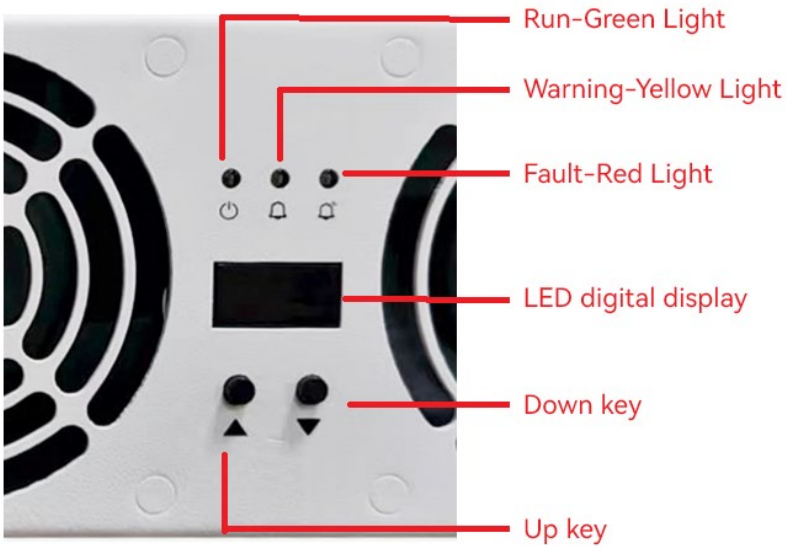

Figure 2 Indicator panel

Indicator light	Normal state	Abnormal status	Abnormal cause
Green light	Bright	Off	No input power
Yellow light	Off	Bright	AC side over/under voltage, DC side under voltage, ambient over temperature, internal bus voltage under voltage, background communication interruption, internal over temperature fault, AC over/under frequency, uneven current distribution alarm, three-phase wiring sequence error, power frequency signal fault, and overload output

© 2025 Suzhou Niuera Energy Co., Ltd All rights reserved.

Red light	Off	Bright	DC side over voltage, internal bus voltage over voltage, DC side short circuit, fan failure, bleeder failure, duplicate address, internal communication failure, DC side single-circuit over voltage

Note: There are 3 indicator lights on the front panel (the indicator lights are not mutually exclusive, as long as the conditions are met, all three lights can be on at the same time)

7. Fault Code Table

Fault Code	Code meaning
E01	DC side under voltage
E02	Module overheating (including ambient temperature overheating and internal module overheating due to poor airflow)
E03	AC side under voltage
E04	AC side over voltage
E05	DC side short circuit
E06	DC side over voltage
E07	Duplicate address
E08	Fan failure
E09	Current sharing alarm
E10	Internal communication of the module is interrupted
E11	AC side over/under frequency
E12	reserve
E13	Three-phase line sequence error
E14	Internal busbar over/undervoltage
E15	Discharge failure
E16	Power frequency signal failure

8. Module Buttons

The module has two buttons, the up button (▲) and the down button (▼). By pressing these buttons, you can view the module's information, such as the module's output voltage, output current, address, module group number, operating mode, and power on/off status. Pressing ▲ or ▼ will display the following information in sequence:

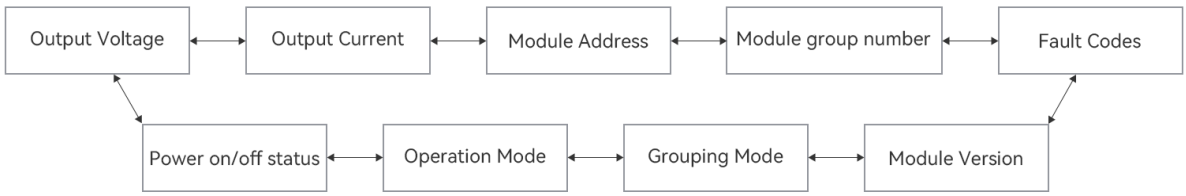

© 2025 Suzhou Niuera Energy Co., Ltd All rights reserved.

Module parameters can also be set using buttons: module DC voltage, DC current, module address, module group number, operating mode, and power on/off status. Only when the module is in debug mode can the buttons be used to power on, shut down, and adjust parameters.

The steps to set module parameters are as follows：

1. Press (▲) or (▼) to switch the current display to the information screen you want to change.
2. Press (▲) or (▼) for approximately 2.5 seconds and release it. You will see the display flash.
3. Press (▲) or (▼) to change the setting value.
4. Press (▲) or (▼) for approximately 2.5 seconds and release it to save the data.

Set the module address:

The module's factory default address is 0x00, and the address range is 0x00 to 0x3C. For example, to set the module address to 4, press (▲) or (▼) until the 00H screen appears. Press (▲) or (▼) for about 2.5 seconds and then release it. The screen will flash. Then, press (▲) repeatedly until the 04H screen appears. Press (▲) or (▼) for about 2.5 seconds to save.

Set the module to debug mode:

After the module is powered on, it is in standby mode and the default operating mode is normal mode. Press (▲) or (▼) until the interface appears. Press (▲) or (▼) for about 2.5 seconds and then release it. The interface will flash. Press (▲) again. When the interface appears, press (▲) or (▼) for about 2.5 seconds to save.

Set the module power on and off in manual mode and adjust parameters

Using the example of setting the module output to 210V/28A in rectifier mode, this article explains how to control the module's power on/off and adjust parameters in debugging mode.

Press (▲) or (▼) until the interface appears. Press (▲) or (▼) for about 2.5 seconds and then release it. The interface will flash. Short-press (▲) again. Once the interface appears, press (▲) or (▼) for about 2.5 seconds to save the setting. Assuming the module's default DC output voltage is 200V, press (▲) or (▼) to access the DC voltage page. Press (▲) or (▼) for about 2.5 seconds and then release it. The interface will flash and the default voltage value will be displayed. Short-press (▲) again. Once the interface appears, press (▲) or (▼) for about 2.5 seconds to save the setting. The module's DC output voltage is set to 210V. The set voltage value takes effect only after you press and hold the Save button.

Assuming the module's default DC output current is 27A, press (▲) or (▼) to access the DC current page. Press (▲) or (▼) for about 2.5 seconds and then release it. The interface will flash, and the default current value will be displayed. Press (▲) again briefly. When the interface appears, press (▲) or (▼) for about 2.5 seconds to save the setting. The module's DC current is set to 28A. The set current value takes effect only after you press and hold (Save).

Set the module working mode

When the module is in grid-connected mode, the panel's operating mode display shows "-b"; when the module is in off-grid mode, the panel's operating mode display shows "-L"; when the module is in rectifier mode, the panel's operating mode display shows "-Z".

For example, to change from grid-connected mode to rectifier mode: first press (▲) or (▼) until the "-b" screen appears. Press (▲) or (▼) for about 2.5 seconds and then release. The screen will flash.

Shortly press (▲) again. When the "-Z" screen appears, press (▲) or (▼) for about 2.5 seconds to save.

© 2025 Suzhou Niuera Energy Co., Ltd All rights reserved.

9. Module Interface Definition

The bidirectional module features AC-side and DC-side sockets on its rear panel as illustrated below.

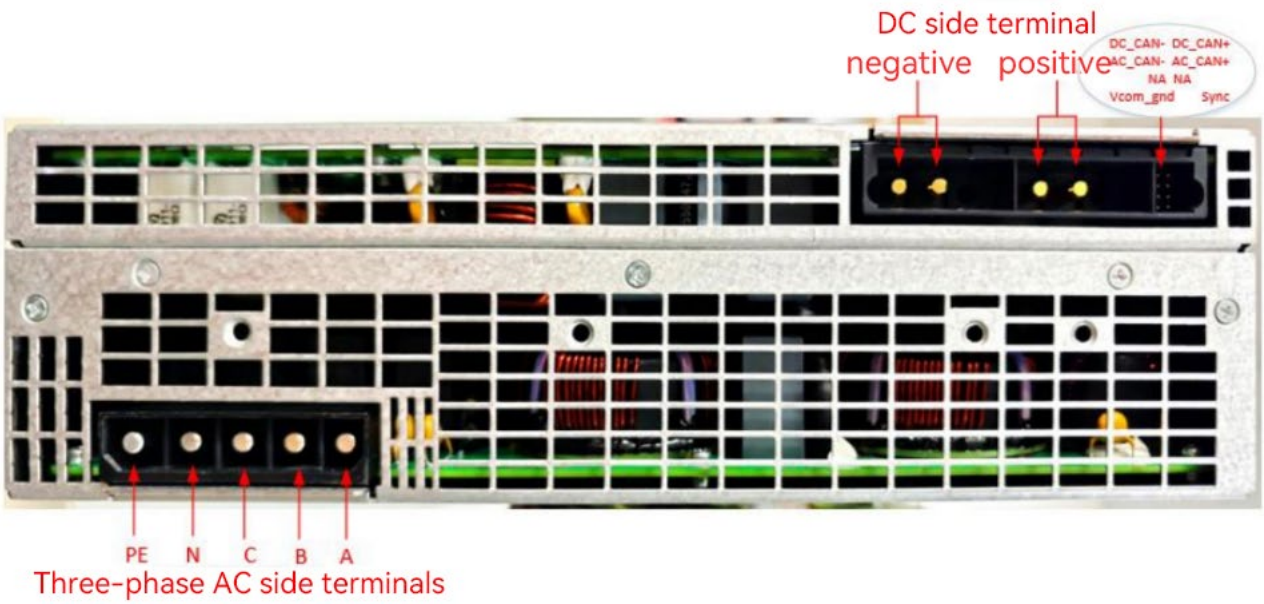

Figure 2-4 Input/Output Port Definition Schematic

Category	Silkscreen	Specification
AC Side	PE	Connect to system grounding terminal
	N	Neutral line
	C	AC side C-phase
	B	AC side B-phase
	A	AC side A-phase
DC Side	Sync	Power frequency synchronization signal
	Vcom_GND	Power frequency synchronization signal reference ground
	NC	Not connected
	AC_CAN_H	Connect AC_CAN_H
	AC_CAN_L	Connect AC_CAN_L
	DC_CAN_H	Connect DC_CAN_H
	DC_CAN_L	Connect DC_CAN_L
	NC	Not connected
	Vo+	Connect to positive terminal
	Vo-	Connect to negative terminal

© 2025 Suzhou Niuera Energy Co., Ltd All rights reserved.

10. Module Accessory Components Introduction

10.1 Three-Phase AC Side Power Cable

(Recommended cable cross-sectional area: 7AWG or 8AWG)

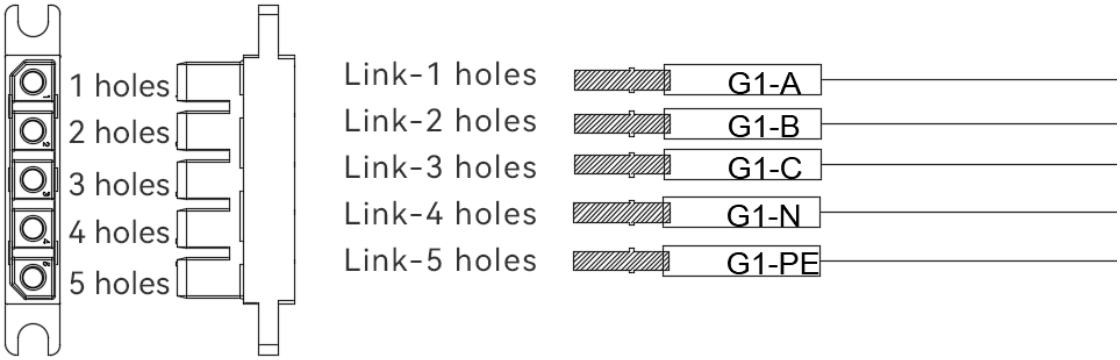

10.2 DC Side Power Cable

(Recommended cable cross-sectional area: 7AWG or 8AWG)

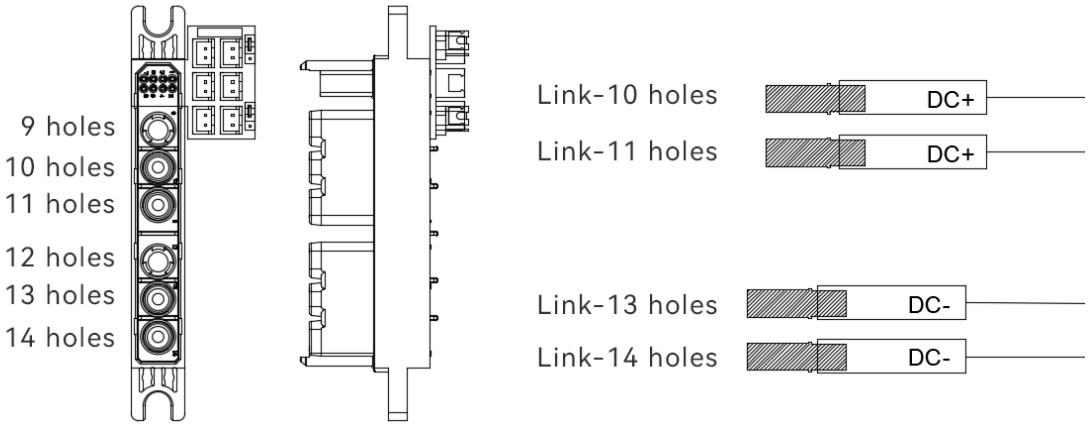

10.3 Communication Cable

Note: AC side/DC side power cables are not included as standard configuration. Please purchase separately if required.

11. Module Terminal Kit Introduction

The terminal kit is shipped as module accessory material, including AC side and DC side connectors, cable power terminals, adapter board, installation screws, and other components. The ingredients are described as follows：

© 2025 Suzhou Niuera Energy Co., Ltd All rights reserved.

11.1 Three-Phase AC Side Connector

Three-Phase AC Side Connector

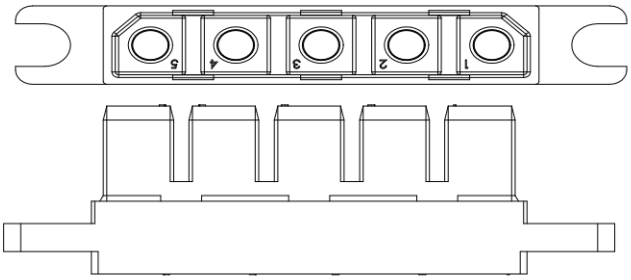

Three-Phase AC Side Connector Definition

Port	Name	Name
1	A-phase	Connect to AC side A-phase
2	B-phase	Connect to AC side B-phase
3	C-phase	Connect to AC side C-phase
4	N	Neutral line
5	PE	Grounding

11.2 DC Side Connector

DC Side Connector

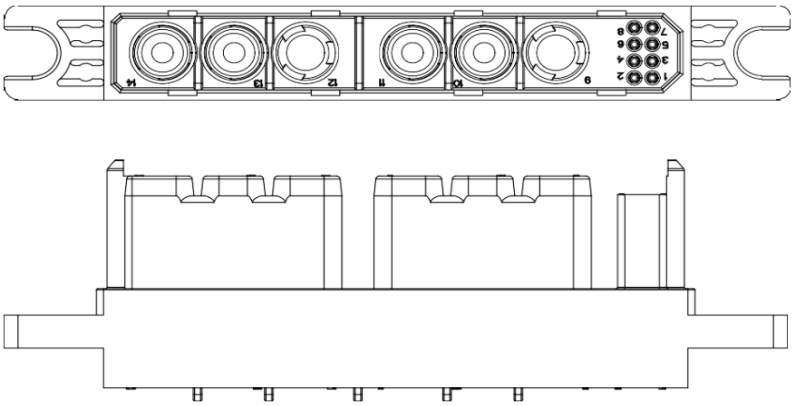

DC Side Connector Definition

Port	Name	Function
1	Sync	Power frequency synchronization signal
2	Vcom_gnd	Power frequency synchronization signal reference ground
3、4	NC	Not connected
5	AC_CAN_H	Connect AC_CAN_H
6	AC_CAN_L	Connect AC_CAN_L
7	DC_CAN_H	Connect DC_CAN_H
8	DC_CAN_L	Connect DC_CAN_L
9、12	NC	Not connected
10、11	Positive	Connect to positive terminal
13、14	Negative	Connect to negative terminal

© 2025 Suzhou Niuera Energy Co., Ltd All rights reserved.

11.3 Adapter Board

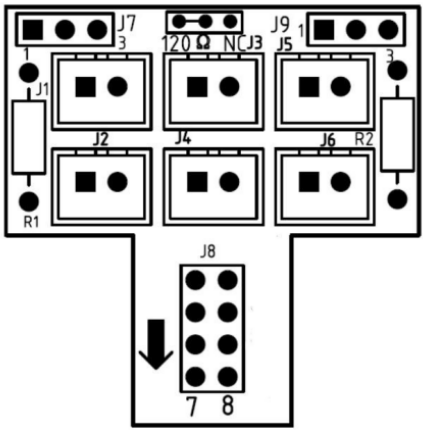

Adapter Board Definition

Port	Name	Function
J1-1/J2-1	DC_CAN_H	Connect DC_CAN_H
J1-2/J2-2	DC_CAN_L	Connect DC_CAN_L
J3-1/J4-1	AC_CAN_H	Connect AC_CAN_H
J3-2/J4-2	AC_CAN_L	Connect AC_CAN_L
J5-1/J6-1	Sync	Power frequency synchronization signal
J5-2/J6-2	Vcom_gnd	Power frequency synchronization signal reference ground
J7	Shorting jumper	Short pins 1 and 2 to connect 120Ω matching resistor to DC_CAN communication bus. Pin 3 is NC.
J9	Shorting jumper	Short pins 1 and 2 to connect 120Ω matching resistor to AC_CAN communication bus. Pin 3 is NC.

11.4 Mounting Screws

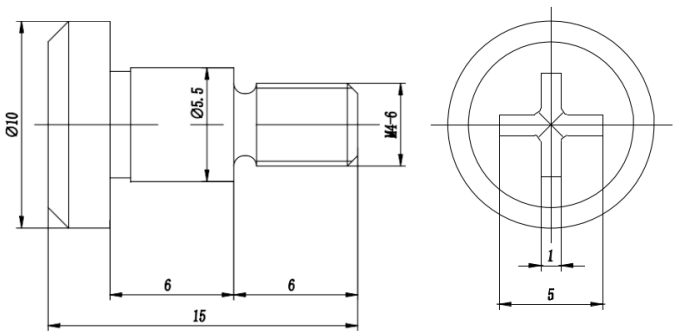

DC Side Installation Screw Dimensions (Unit: mm)

© 2025 Suzhou Niuera Energy Co., Ltd All rights reserved.

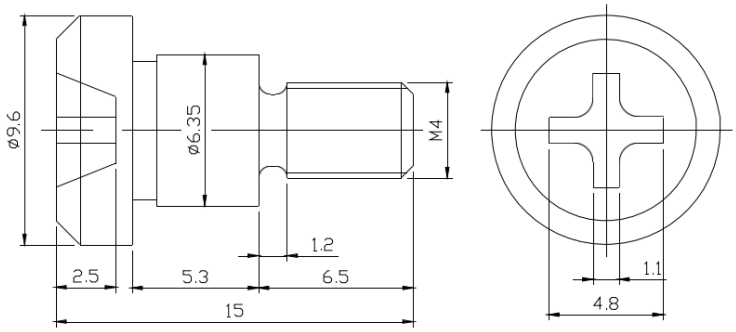

AC Side Installation Screw Dimensions (Unit: mm)

11.5 Wiring harness power terminal

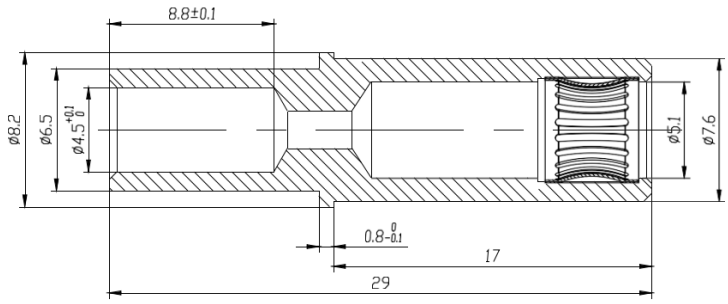

Crimped DC Side Cable Power Terminal Dimensions (Unit: mm)

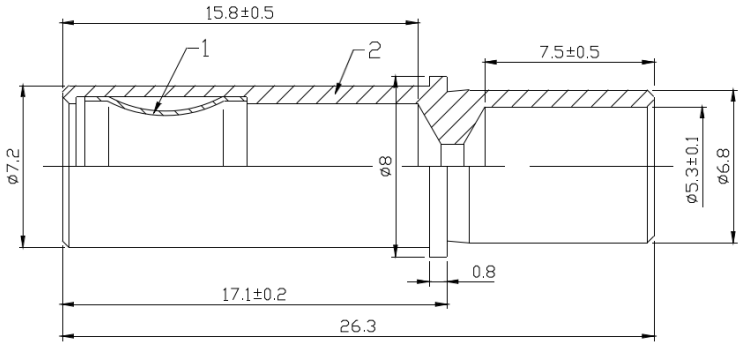

Crimped Three-Phase AC Side Cable (including PE, N wire) Power Terminal Dimensions (Unit: mm)

The above 7 types of materials are terminal kit accessories. For assembly into complete power cable sets, please refer to the following cable requirements for wire selection:

Cable	Recommended Specifications
AC Side Power Cable	850Vdc voltage rating, operating temperature -40°C-105°C, conductor cross-section 8.37mm² flame-retardant cable (e.g., UL1015-8AWG cable)
DC Side Power Cable	1000Vdc voltage rating, operating temperature -40°C-105°C, conductor cross-section 8.37mm² flame-retardant cable (e.g., UL1032-8AWG cable)
CAN Communication Cable	300Vdc voltage rating, operating temperature -40°C-80°C, conductor cross-section 0.12810mm² (e.g., UL1007-24AWG cable)

© 2025 Suzhou Niuera Energy Co., Ltd All rights reserved.

12. Fault Symptoms and Solutions

12.1 Fault Troubleshooting Recommendations

Abnormal Phenomenon	Relate Alarm	Root Cause Analysis	Troubleshooting Recommendations
Running Indicator (Green) OFF	None	No input voltage	●Check module power supply
		Module not fully inserted	●Re-insert module
Protection Indicator (Yellow) ON	AC side under/over voltage E03 or E04	AC side voltage out of normal range	●Ensure AC side voltage within normal range ●Check AC side cables for loose or poor contact
	DC side under voltage E01	DC side under voltage protection	●Rectifier mode: Ensure DC output voltage within normal range ●Inverter mode: Ensure DC input voltage within normal range ●Replace faulty module with normal module; if still not working, contact manufacturer support
	Internal bus over/under voltage E14	Internal bus voltage out of normal range	●Replace faulty module with normal module; if still not working, contact manufacturer support
	Backend communication interruption	Module communication interruption	● Check communication line connections ● Check if 120Ω matching resistors are connected at both ends of CAN bus; measure CAN bus resistance when powered off (normal: 60Ω) If above points are normal, use CAN analyzer to read CAN bus messages, confirm system-module communication protocol consistency
	AC over/under frequency E11	AC side frequency out of normal range	● Check AC side cables for loose or poor contact ● Replace faulty module with normal module; if still not working, contact manufacturer support
	Module current imbalance E09	Large difference between DC side current and DC side average current	● Check if module communication is normal and communication line connections are proper; if communication is normal but system still abnormal, replace with new module
	Module overheating E02	Poor airflow	● Check module inlet/outlet for obstructions ● Verify system exhaust capacity meets module requirements
		Excessive ambient temperature	● Open system inlet/outlet for heat dissipation
	N-line connection error E12	N-line connected in non-off-grid mode	● Check AC side cables for N-line connection
	Three-phase sequence error E13	AC side three-phase sequence incorrectly connected	● Check AC side cables for correct phase sequence connection

© 2025 Suzhou Niuera Energy Co., Ltd All rights reserved.

	Power frequency signal fault E16	In off-grid parallel operation, slave unit's power frequency sync signal disconnected from master	● Check power frequency signal line connections
Fault Indicator (Red) ON	DC side overvoltage E06	Rectifier mode: Module output voltage exceeds set output overvoltage value	● Power off module, verify if module output overvoltage value was previously changed, confirm issued module output voltage is less than set module output overvoltage value, then restart; if fault protection continues, contact support
		Inverter mode: DC side input voltage exceeds 1030V	● Ensure input voltage within module's normal input voltage range ● Check DC input cables for loose or poor contact ● Replace faulty module with normal module; if still not working, contact manufacturer support
	DC side short circuit E05	Module DC side positive/negative terminals short-circuited	● Power off module, check if positive/negative terminals are short-circuited in DC terminal circuit; after confirming no short circuit, restart; if fault protection continues, contact manufacturer support
	Address duplication E07	Module address duplication	● Observe address page on duplicate address module panel, modify duplicate module address using panel keys
	Fan fault E08	Module fan fault	● Fan connection loose/fan failure, contact manufacturer support
	Discharge fault E15	Discharge fault	● Contact manufacturer support
	Internal communication fault E10	Module communication fault	● Check if module communication is normal and communication line connections are proper; if communication is normal but system still abnormal, contact manufacturer support

12.2 Replacing Faulty Module

After bidirectional module failure, follow these steps for replacement:

- Caution: After module operation for some time, the enclosure surface temperature may be very high. When removing, firmly grip the handle and avoid touching the enclosure to prevent burns.
- Check system to confirm no voltage at DC terminals and ensure all operating modules in the system are shut down. If battery is connected, disconnect battery switch.
- Disconnect bidirectional module input-side circuit breaker, remove the 2 M5 captive screws on the faulty module panel, grasp the faulty module handle, and slowly pull it out of the cabinet.
- Firmly grip the new module handle, support the module bottom, and smoothly push into the cabinet to the fixed position.
- Tighten the 2 M5 captive screws on the panel to secure the bidirectional module in the cabinet.
- Close the module input-side circuit breaker.
- Check if the monitoring module can identify the replaced bidirectional module and if the new module can share current with other modules. If all checks are normal, operation is normal and replacement process is complete.

© 2025 Suzhou Niuera Energy Co., Ltd All rights reserved.